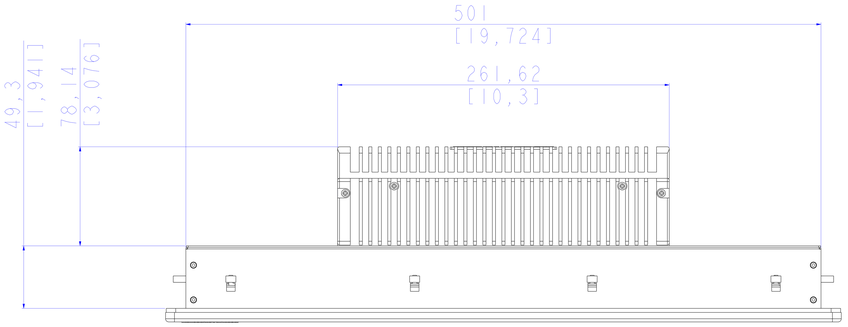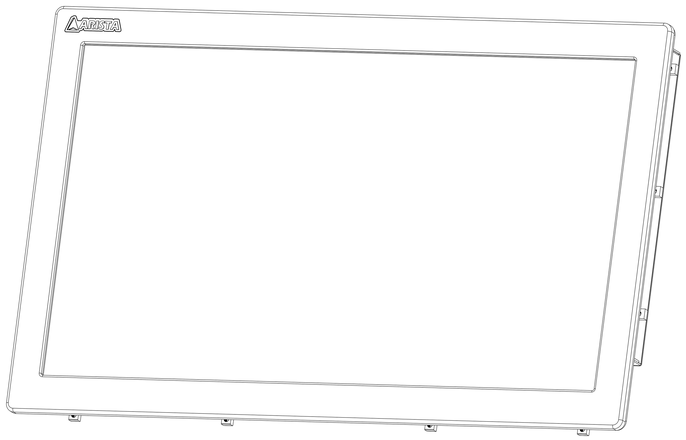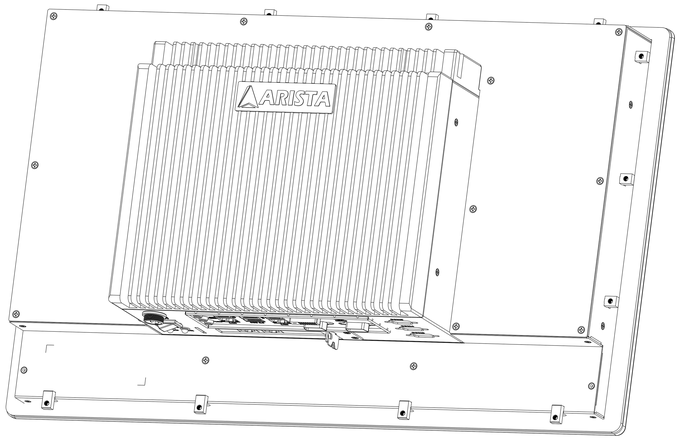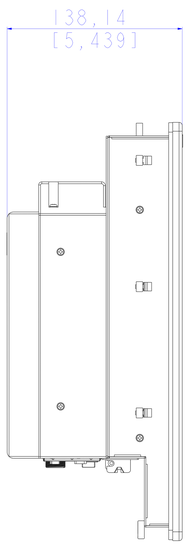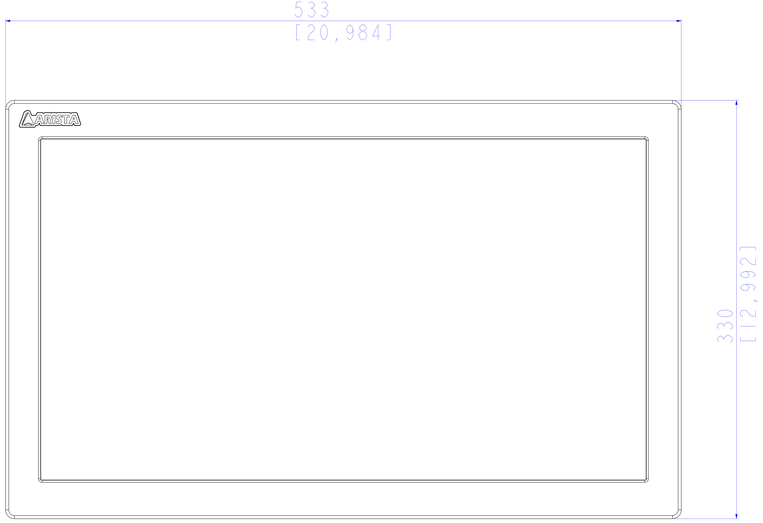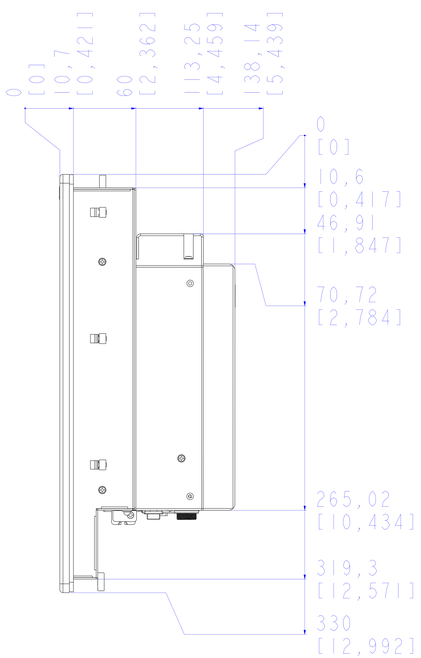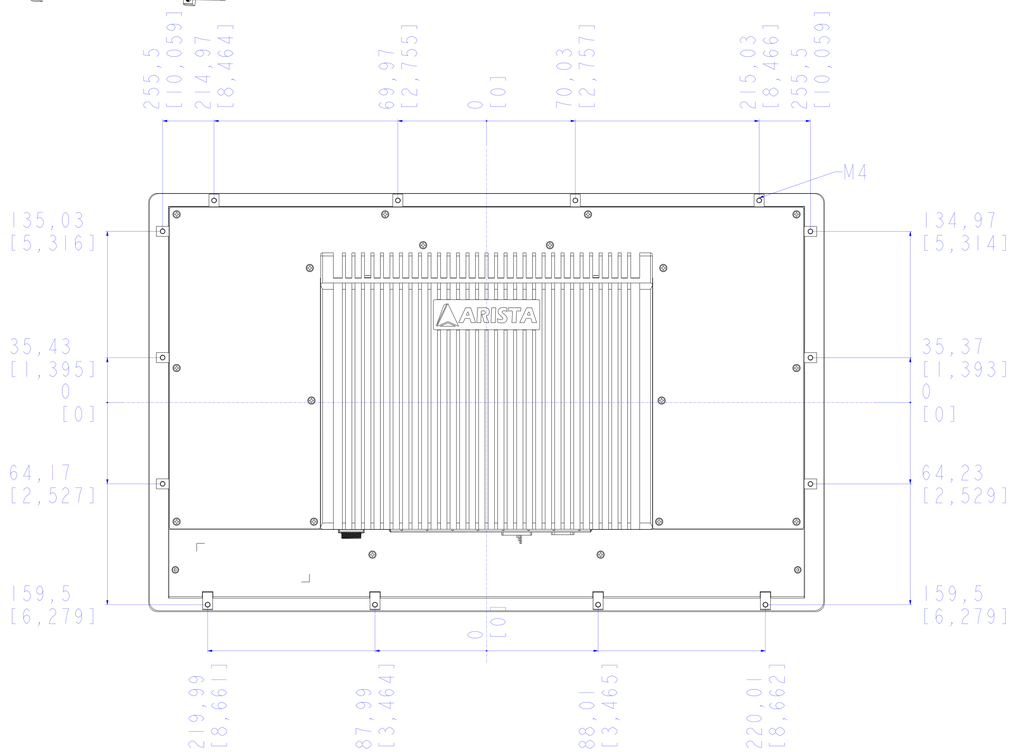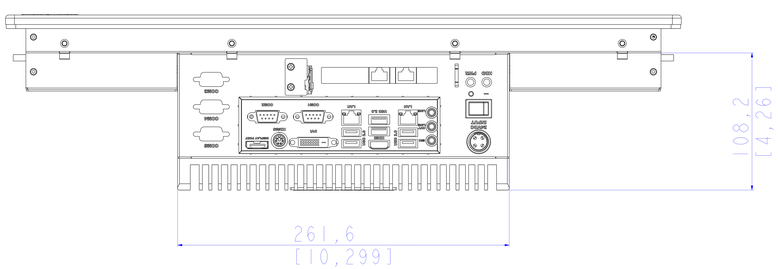ARP-2221AP-H01